THIS DRAWING IS UNPUBLISHED. RELEASED FOR PUBLICATION -
© COPYRIGHT copyright_date ALL RIGHTS RESERVED.

REVISIONS

P	LTR	DESCRIPTION	DATE	DWN	APVD
	A1	REVISED PER ECR-18-011580	24JUL2018	BKW	GJ
	A2	REVISED PER ECR-19-009496	17JUN2019	BKW	GJ
	A3	REVISED PER ECR-19-009923	03JUL2019	BKW	DS
	B	REVISED PER ECR-19-014974	30OCT2019	PC	DS

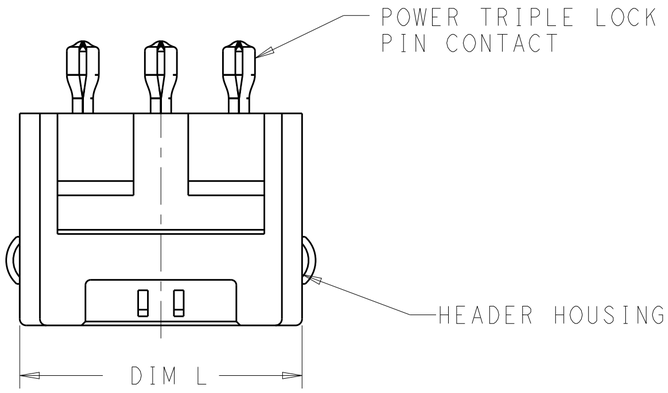

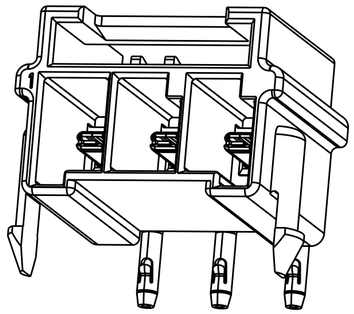

1 CAN BE SECURED TO THE PLUG WITH OPTIONAL CPA P/N 1971789-1.

2 FLAMMABILITY RATED PER UL 94 V-0.

3 LEVEL INDICATOR: PBT = STANDARD TEMP/105°C PBT GLASS FILLED
HDT = HIGH TEMP 150°C NYLON PA66 UNFILLED

4 PARTS COMPLY WITH SOLDERAILITY SPEC TEC-109-11-11-1

5 DATUM AND BASIC DIMENSION ESTABLISHED BY CUSTOMER.

6 THIS PRODUCT HAS NOT COMPLETED VALIDATION TESTING.

7 GLOW WIRE COMPLIANT IN ACCORDANCE WITH IEC 60335-1. THIS IS BASED ON THE PRODUCT MEETING A GWEPT 850°C TEST AND A RESIN GWIT GREATER THAN OR EQUAL TO 775°C.

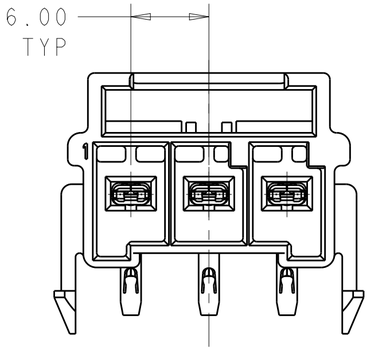

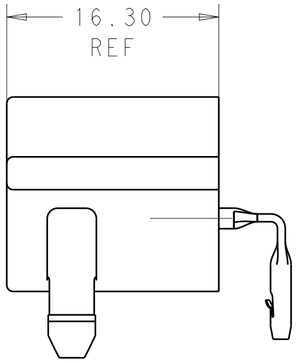

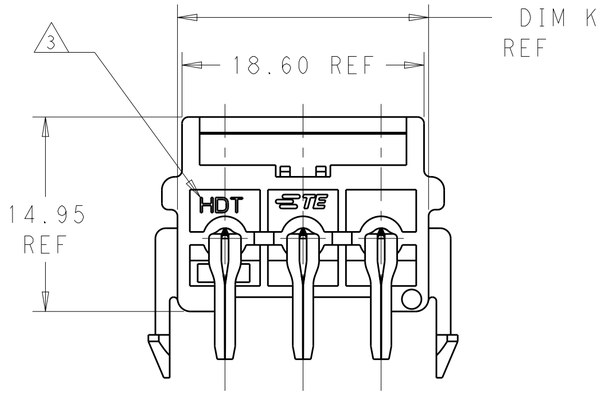

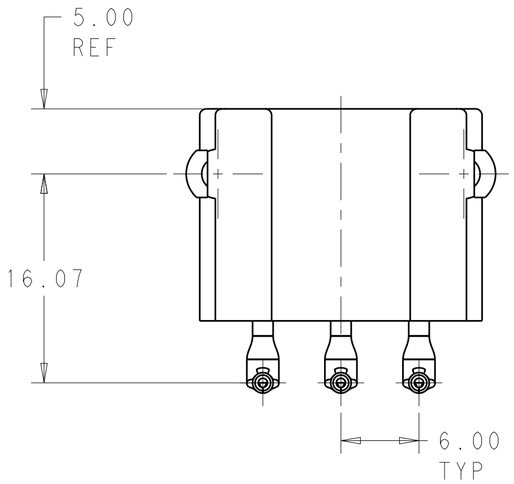

MATING PLUG	CONTACT MATERIAL	HOUSING MATERIAL	NO. OF POSITIONS	DIM H	DIM P	DIM L	DIM K	COLOR	KEY	PART NUMBER
5-1971773-7	COPPER ALLOY	NYLON PA66 150°C 7	5	30.55	27.28	33.7	31.3	LIGHT GREY	A	1-1969694-5
5-1971773-4			4	24.55	21.28	27.7	25.3	LIGHT GREY	A	1-1969694-4
5-1971773-3			3	18.55	15.28	21.7	19.3	LIGHT GREY	A	1-1969694-3
5-1971773-2			2	12.55	9.28	15.7	13.3	LIGHT GREY	A	1-1969694-2
1-1971773-7	COPPER ALLOY	PBT 105°C	5	30.55	27.28	33.7	31.3	NATURAL	A	1969694-5
1-1971773-4			4	24.55	21.28	27.7	25.3	NATURAL	A	1969694-4
1-1971773-3			3	18.55	15.28	21.7	19.3	NATURAL	A	1969694-3
1-1971773-2			2	12.55	9.28	15.7	13.3	NATURAL	A	1969694-2

SEE SHEET 2
FOR PCB HOLE PATTERN

THIS DRAWING IS A CONTROLLED DOCUMENT.

DIMENSIONS: mm

TOLERANCES UNLESS OTHERWISE SPECIFIED:
0 PLC ±-
1 PLC ±-
2 PLC ±0.13
3 PLC ±0.20
4 PLC ±-
ANGLES ±-

MATERIAL: SEE TABLE -

FINISH: PRE-TIN -

DWN JR RUTH 30-Oct-19
CHK DOMOINIC FAROLE 19SEPT14
APVD DOMOINIC FAROLE 19SEPT14
PRODUCT SPEC 108-32090
APPLICATION SPEC 114-32136
WEIGHT -

CUSTOMER DRAWING

TE Connectivity

NAME: ASSEMBLY, POWER TRIPLE LOCK, RIGHT ANGLE HEADER -

SIZE	CAGE CODE	DRAWING NO	RESTRICTED TO
A2	-	C-1969694	-

SCALE 3:1 SHEET 1 OF 2 REV B

1471-9 (3/13)

THIS DRAWING IS UNPUBLISHED. RELEASED FOR PUBLICATION -
© COPYRIGHT copyright_dBYe- ALL RIGHTS RESERVED.

REVISIONS

P	LTR	DESCRIPTION	DATE	DWN	APVD
	-	SEE SHEET 1	-	-	-

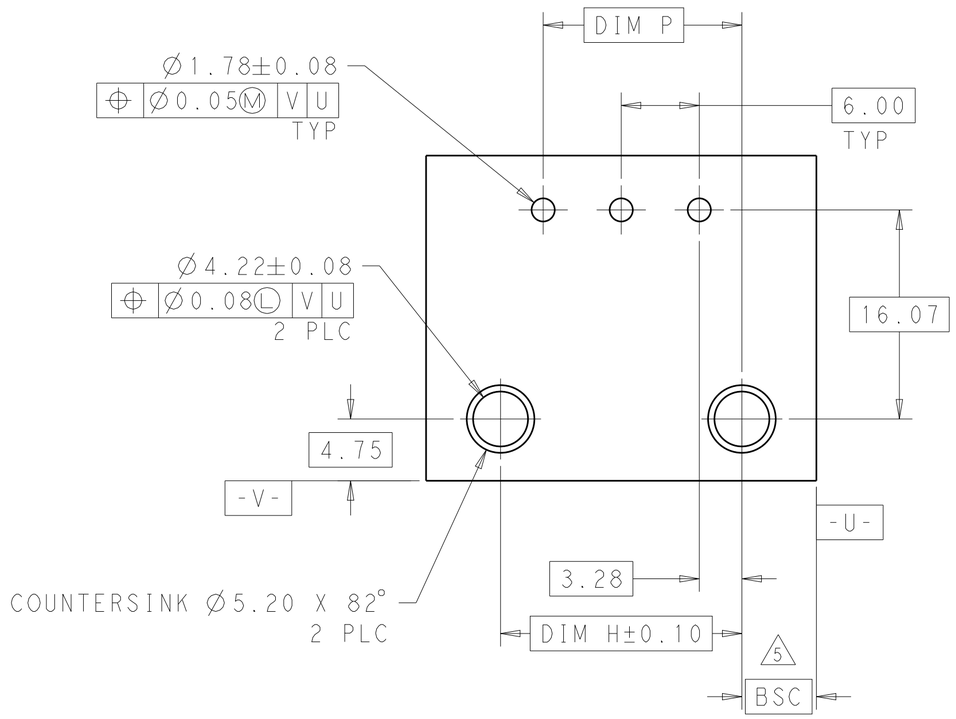

RECOMMENDED PCB LAYOUT
WITH A 1.58 THK BOARD

3 POSITION SHOWN

THIS DRAWING IS A CONTROLLED DOCUMENT.

DIMENSIONS: mm

TOLERANCES UNLESS OTHERWISE SPECIFIED:
0 PLC ±-
1 PLC ±-
2 PLC ±0.13
3 PLC ±0.20
4 PLC ±-
ANGLES ±-

MATERIAL: SEE TABLE -

FINISH: PRE-TIN -

DWN JR RUTH 30-Oct-19
CHK DOMOINIC FAROLE 19SEPT14
APVD DOMOINIC FAROLE 19SEPT14
PRODUCT SPEC 108-32090
APPLICATION SPEC -
WEIGHT -

TE Connectivity

NAME: ASSEMBLY, POWER TRIPLE LOCK, RIGHT ANGLE HEADER -

SIZE	CAGE CODE	DRAWING NO	RESTRICTED TO
A2	-	C-1969694	-

CUSTOMER DRAWING | SCALE 3:1 | SHEET 2 OF 2 | REV B

1471-9 (3/13)